KRPAN External Venetian Blind - under plaster + purenit

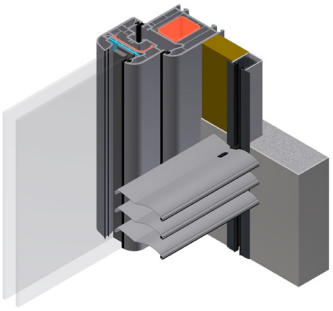

- **COMPACT AND MODERN APPEARANCE**
- **HEAT PROTECTION**
- **LIGHT REGULATION**
- **NUMEROUS COLOR AND DESIGN COMBINATIONS**
- **ENERGY SAVINGS IN COOLING/HEATING**

KRPAN External Venetian Blind with under plaster casing, enclosed on all sides, featuring insulation holder made of thick-walled extruded aluminum ensuring compactness and durability of the casing. Under plaster guide with purenit insulation allows concealed installation. Roller insect screens include a brake for smoother lifting.

SLATS | Color Palette:

CT-80 | C-80 | CT-65 | ZX-90 | ZX-75

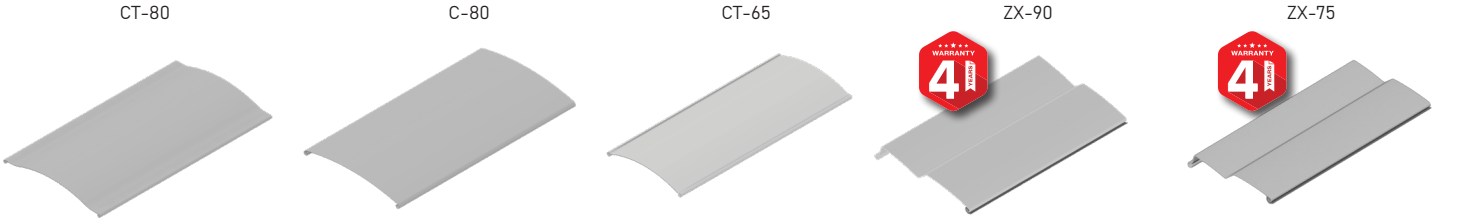

WARNING: Some colors on the palette may vary from the original!

MASK, GUIDES, END BAR | Color Palette:

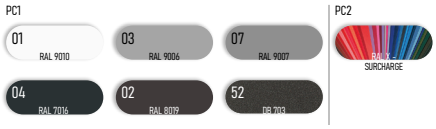

WARNING: Some colors on the palette may vary from the original!

MANIPULATION:

Venetian blinds can be operated manually, while a motor drive provides greater comfort and ease of use. They can be controlled using switches or remote controls, also without any modifications to the walls, while control units enable automated and remote operation via a smartphone.

KRPAN External Venetian Blind - under plaster + purenit

TECHNICAL DRAWINGS | Shade Details:

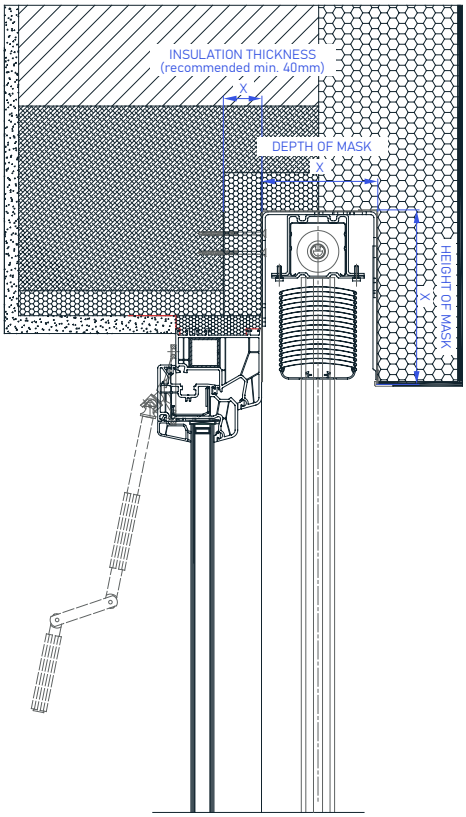

- PURENIT GUIDE - U-profile 30mm
- Final layer of facade 5mm

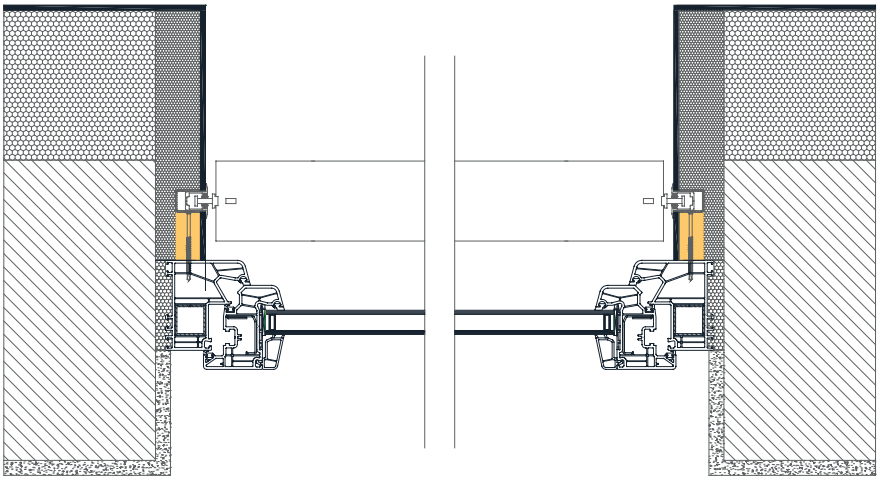

SLATS

GUIDES

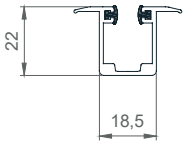

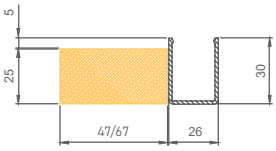

PURENIT

HINGES

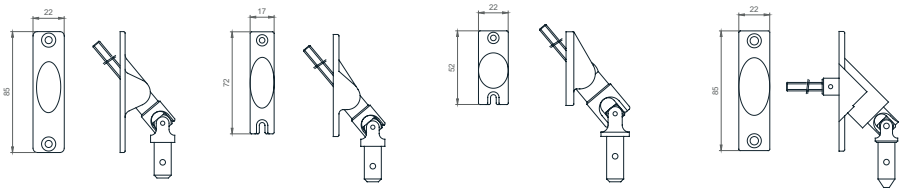

85 X 22mm - 45°

72 X 17mm - 45°

52 X 22mm - 45°

85 X 22mm - 90°
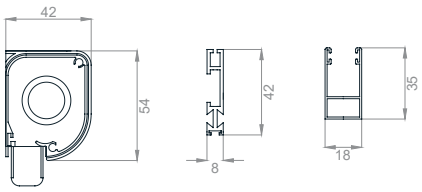
ROLLO INSECT SCREEN